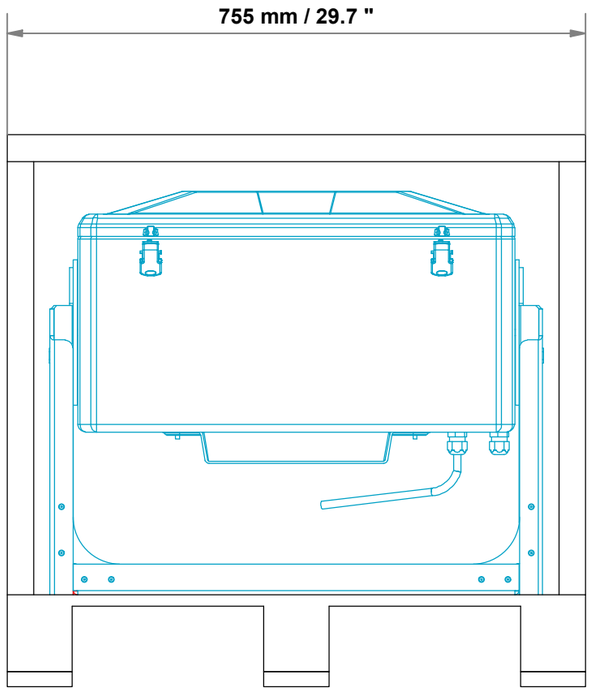

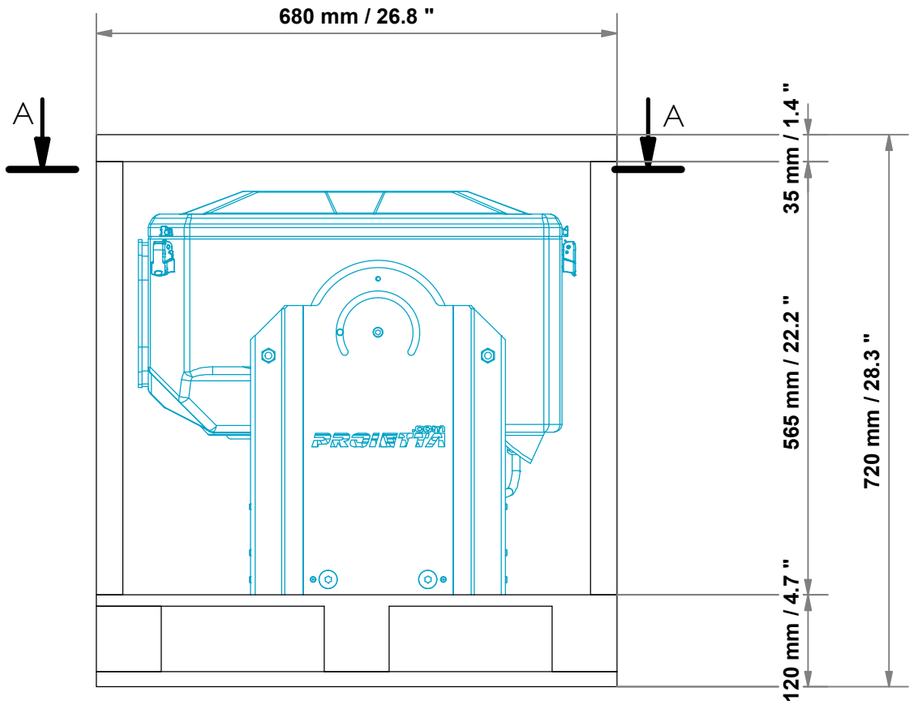

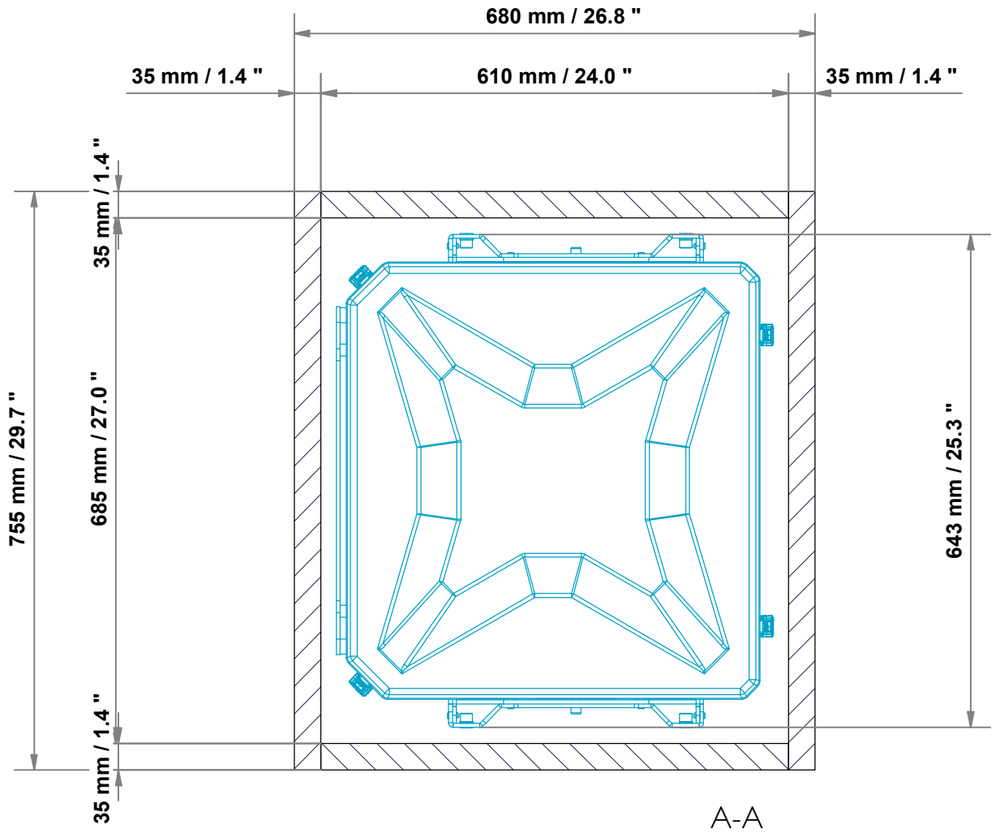

PROJETTA®

AF6 WEATHERPROOF OUTDOOR PROJECTOR ENCLOSURE